Deka®

MORE POWER LESS SPACE™

unigy II®

Tomorrow's energy systems…today

AVR45

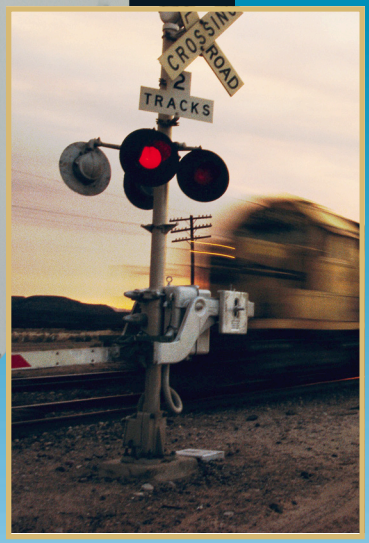

Features and Benefits

- Container and Cover: Impact-resistant polypropylene 28% L.O.I.
- Microcat® Catalyst lowers float current, mitigates thermal buildup and cell dryout
- Separators: Microporous glass mat
- Plates formed with IPF™ technology to assure consistent cell to cell performance
- Shipped at 100% Capacity
- Cycle Life: 2400 cycles @ 20% DOD
- Modules coated and protected with a thick layer of powdered epoxy
- Terminals: Lead plated solid copper

CELL TYPE	AMP HR. C8	Ratings in Amperes at 77ºF (25ºC) to											
		1.75 v.p.c.				1.78 v.p.c.				1.81 v.p.c.			
		8 HR.	10 HR.	24 HR.	100 HR.	8 HR.	10 HR.	24 HR.	100 HR.	8 HR.	10 HR.	24 HR.	100 HR.
AVR45-5	91	11.4	9.6	4.58	1.21	11.3	9.49	4.52	1.21	11.2	9.34	4.49	1.2
AVR45-7	137	17.1	14.4	6.88	1.81	17.0	14.2	6.79	1.81	16.8	14.0	6.73	1.8
AVR45-9	183	22.9	19.2	9.17	2.42	22.6	19.0	9.05	2.41	22.4	18.7	8.89	2.39
AVR45-11	229	28.6	24.0	11.5	3.02	28.3	23.7	11.3	3.01	27.9	23.4	11.2	2.99
AVR45-13	274	34.3	28.8	13.8	3.63	34.0	28.5	13.6	3.62	33.5	28.0	13.5	3.59
AVR45-15	320	40.0	33.6	16.0	4.23	39.6	33.2	15.8	4.22	39.1	32.7	15.7	4.19
AVR45-17	366	45.7	38.4	18.3	4.84	45.3	37.9	18.1	4.82	44.7	37.4	18	4.79
AVR45-19	411	51.4	43.2	20.6	5.44	50.9	42.7	20.4	5.42	50.3	42.0	20.2	5.39
AVR45-21	457	57.1	48.0	22.9	6.05	56.6	47.4	22.6	6.03	55.9	46.7	22.4	5.99
AVR45-23	503	62.9	52.8	25.2	6.65	62.3	52.2	24.9	6.63	61.5	51.4	24.7	6.58
AVR45-25	549	68.6	57.6	27.5	7.26	67.9	56.9	27.1	7.23	67.1	56.1	26.9	7.18
AVR45-27	594	74.3	62.4	29.8	7.86	73.6	61.7	29.4	7.84	72.7	60.7	29.2	7.78
AVR45-29	640	80.0	67.2	32.1	8.47	79.2	66.4	31.7	8.44	78.2	65.4	31.4	8.38
AVR45-31	686	85.7	72.0	34.4	9.07	84.9	71.1	33.9	9.04	83.8	70.1	33.7	8.98
AVR45-33	731	91.4	76.8	36.7	9.68	90.6	75.9	36.2	9.64	89.4	74.7	35.9	9.58

CELL TYPE	AVR45 Single Cell Can Dimensions							
	Length		Width		Height		Weight	
	in.	mm.	in.	mm.	in.	mm.	lb.	kg.
AVR45-5	2.25	57.2	6.70	170.1	16.11	409.1	26	12
AVR45-7	3.00	76.1	6.70	170.1	16.11	409.1	34	15
AVR45-9	3.75	95.1	6.70	170.1	16.11	409.1	42	19
AVR45-11	4.50	114.2	6.70	170.1	16.11	409.1	50	23
AVR45-13	5.25	133.2	6.70	170.1	16.11	409.1	58	26
AVR45-15	6.00	152.3	6.70	170.1	16.11	409.1	66	30
AVR45-17	6.75	171.3	6.70	170.1	16.11	409.1	74	34
AVR45-19	7.50	190.4	6.70	170.1	16.11	409.1	82	37
AVR45-21	8.25	209.4	6.70	170.1	16.11	409.1	90	41
AVR45-23	9.00	228.5	6.70	170.1	16.11	409.1	98	44
AVR45-25	9.75	247.5	6.70	170.1	16.11	409.1	106	48
AVR45-27	10.50	266.6	6.70	170.1	16.11	409.1	114	52
AVR45-29	11.25	285.6	6.70	170.1	16.11	409.1	122	56
AVR45-31	12.00	304.7	6.70	170.1	16.11	409.1	130	59
AVR45-33	12.75	323.7	6.70	170.1	16.11	409.1	138	63

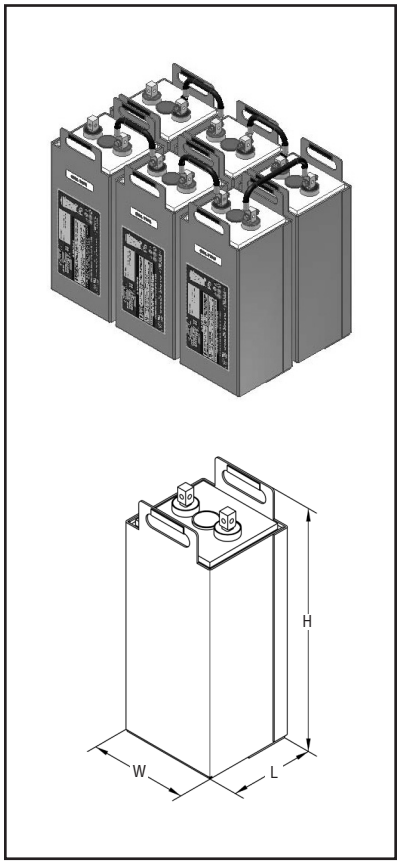

Temperature Effects on Capacity

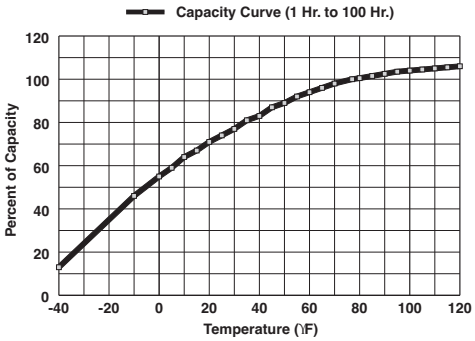

Depth of Discharge vs. Cycles

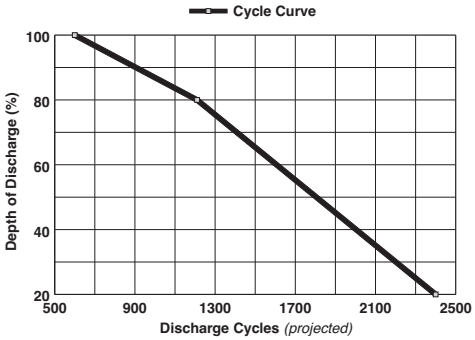

QUALITY SYSTEM CERTIFIED
ISO 9001
IATF 16949
ENVIRONMENTAL SYSTEM CERTIFIED
ISO 14001

UL Recognized Component

California Proposition 65 Warning: Batteries, battery posts, terminals and related accessories contain lead and lead compounds, and other chemicals known to the state of California to cause cancer and birth defects or other reproductive harm. Wash hands after handling.

DISTRIBUTED BY:

INSTALLATION AND OPERATING INSTRUCTIONS
https://www.eastpennmanufacturing.com/wp-content/uploads/AVR45-HT45-Single-Cell-Railway-Utility-IO-2727.pdf

EASTPENN

e-mail: sales@eastpennunigy.com
Order Department Hotline: 610-682-3263

East Penn Manufacturing Co. Lyon Station, PA 19536-0147 Phone: 610-682-6361 Fax: 610-682-4781 **www.eastpennunigy.com**

E.P.M. Form No. 1359 04/23

© 2024 by EPM Printed in U.S.A.

All data subject to change without notice. No part of this document may be copied or reproduced, electronically or mechanically, without written permission from the company.